COVID-19 Diagnostic Process Simulation

Hiu Man Grisch, April 10, 2025

ZHAW Simulation for Beginners FS2025

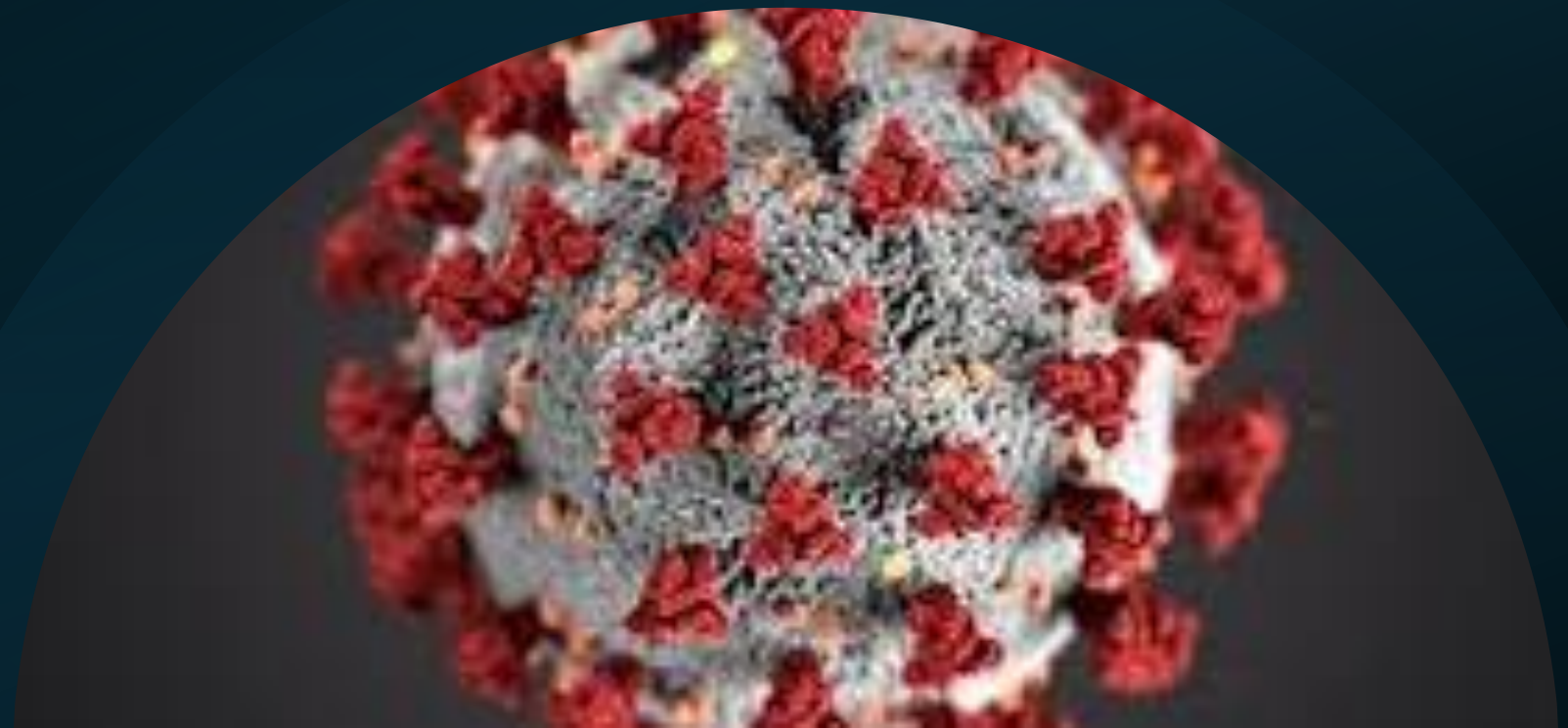

Introduction

Objective: Simulating COVID-19 testing process to evaluate **efficiency** of overall throughput in a covid test center

To minimize the waiting time (within 24 hours) to receive the results

Process overview

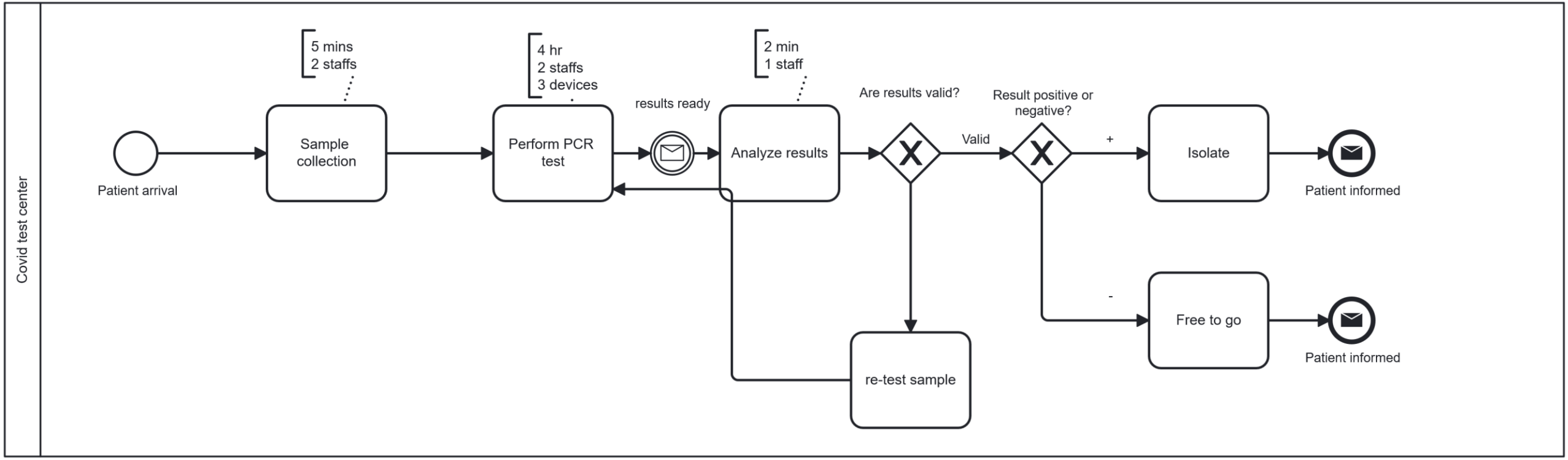

Input Variables

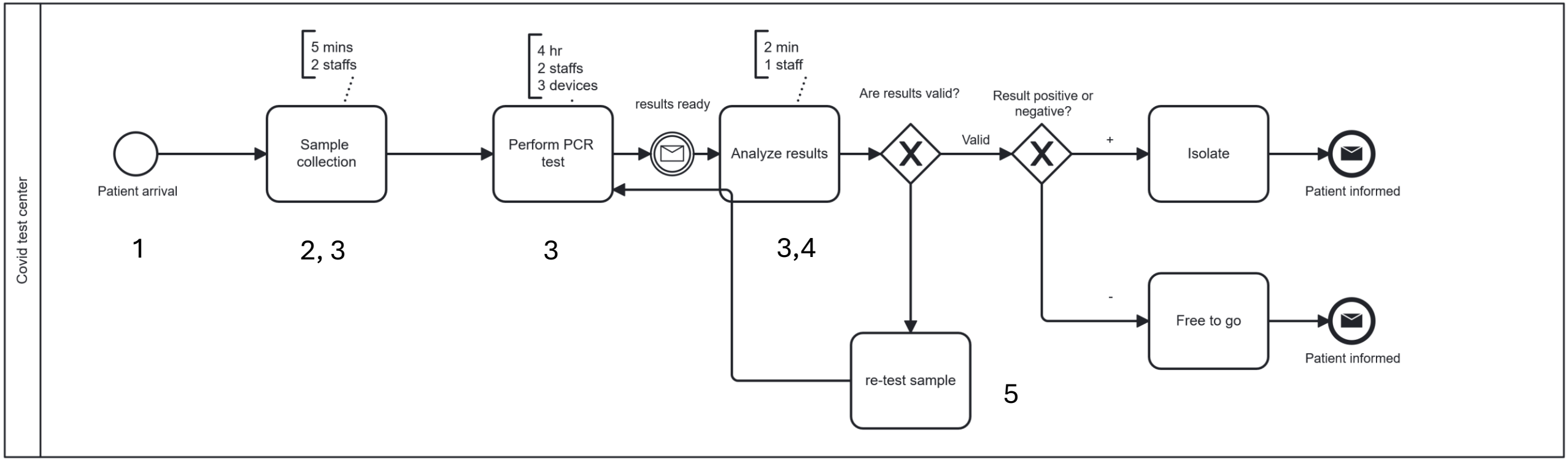

1. Patient Arrival Rate
2. Sample Collection Time
3. Lab Processing Time
4. Test Result Processing Time
5. Retest Probability

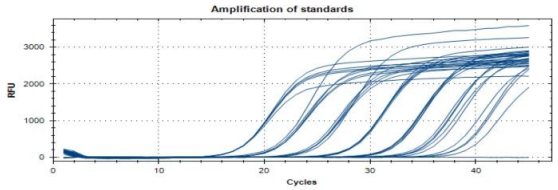

a)

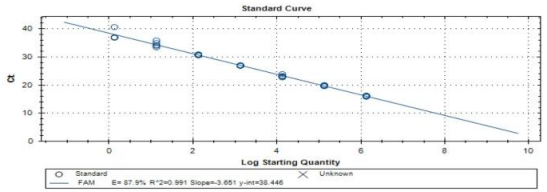

b)

Influencing Factors

- Patient compliance/ Number of patients
- Staff availability for sample collection and sample handing efficiency
- Machine capacity
- Testing equipment reliability/ Test sensitivity

Key Process Variables

- Time in system
- Queue length
- Sample collection time
- Lab processing time
- Test turnaround
- Retest counts

Key Performance Indicators (KPIs)

- Average Waiting Time per Patient – Measures the time patients spend in the system before receiving results.
- Testing Throughput – Number of tests completed per day.
- Lab Capacity– Percentage of lab capacity being used at a given time.
- Test Result Accuracy Rate – Ensures the reliability of testing (based on sensitivity and specificity values of RT-PCR).
- Percentage of Positive Cases – Helps assess disease prevalence.

Stochastic Elements

1. Patient arrival rate – exponential distribution
2. Sample collection time – triangular distribution: min 3 min, mode 5 min, max 7 min
3. Lab processing time – normal distribution: mean 4 hours, std. deviation 30 min
4. Lab equipment failures –exponential
5. Staff availability (allocation?) – time-dependent availability
6. Retest probability: 15% (based on inconclusive results)
7. Number of patients per hour per day - exponential distribution

Impact of Stochastic Elements

- High variation in patient arrivals may cause congestion in testing center.
- Long lab processing times could delay test results, leading to inefficiencies in case management as well as the performance of the staff.
- Random false positives/negatives may increase the need for retesting and impair public health outcomes.

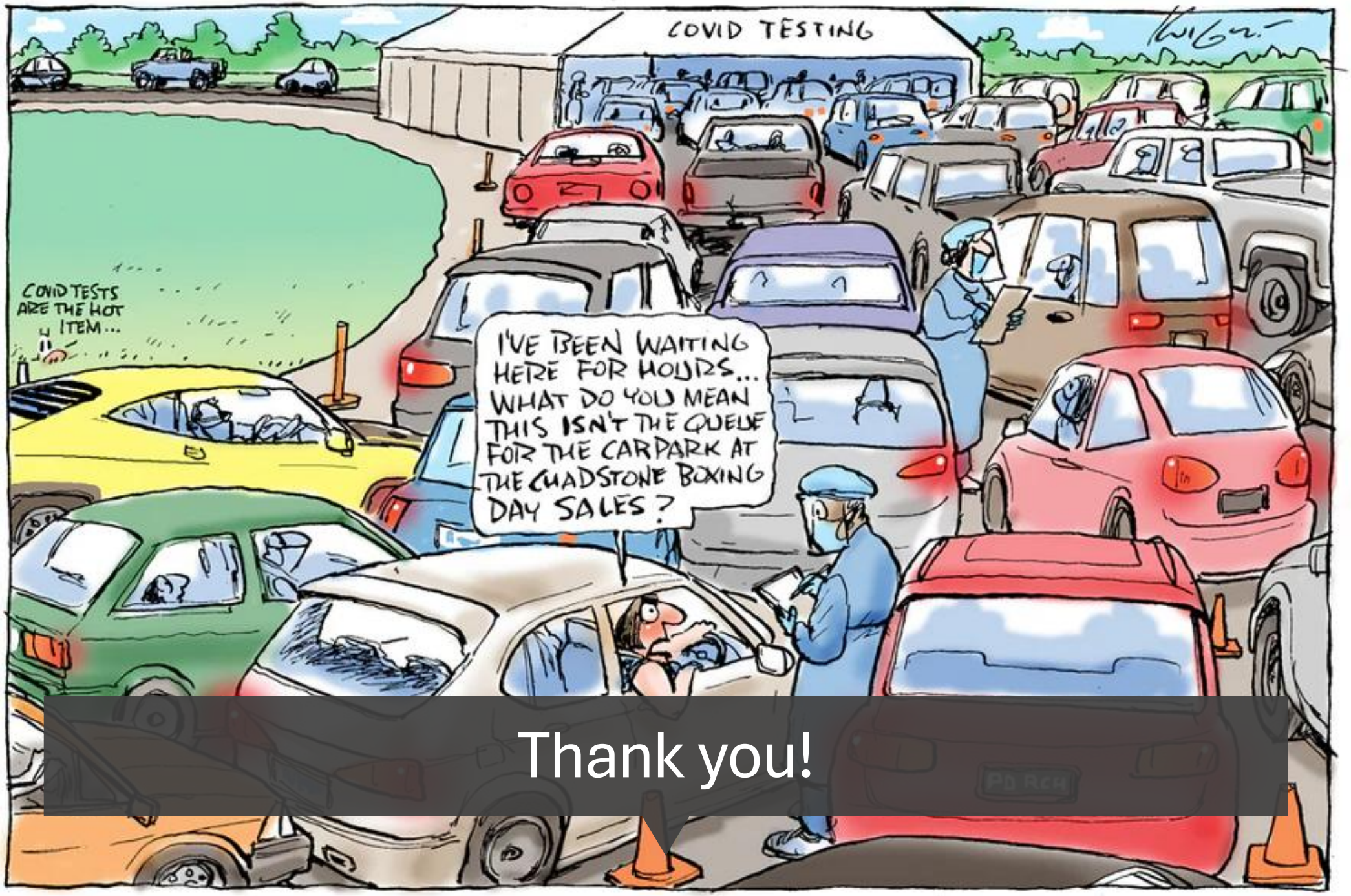
COVID TESTING
COVID TESTS ARE THE HOT ITEM...
I'VE BEEN WAITING HERE FOR HOURS... WHAT DO YOU MEAN THIS ISN'T THE QUEUE FOR THE CARPARK AT THE CHADSTONE BOXING DAY SALES?

Thank you!